BX61+motorized unit dimensions

(unit: mm)

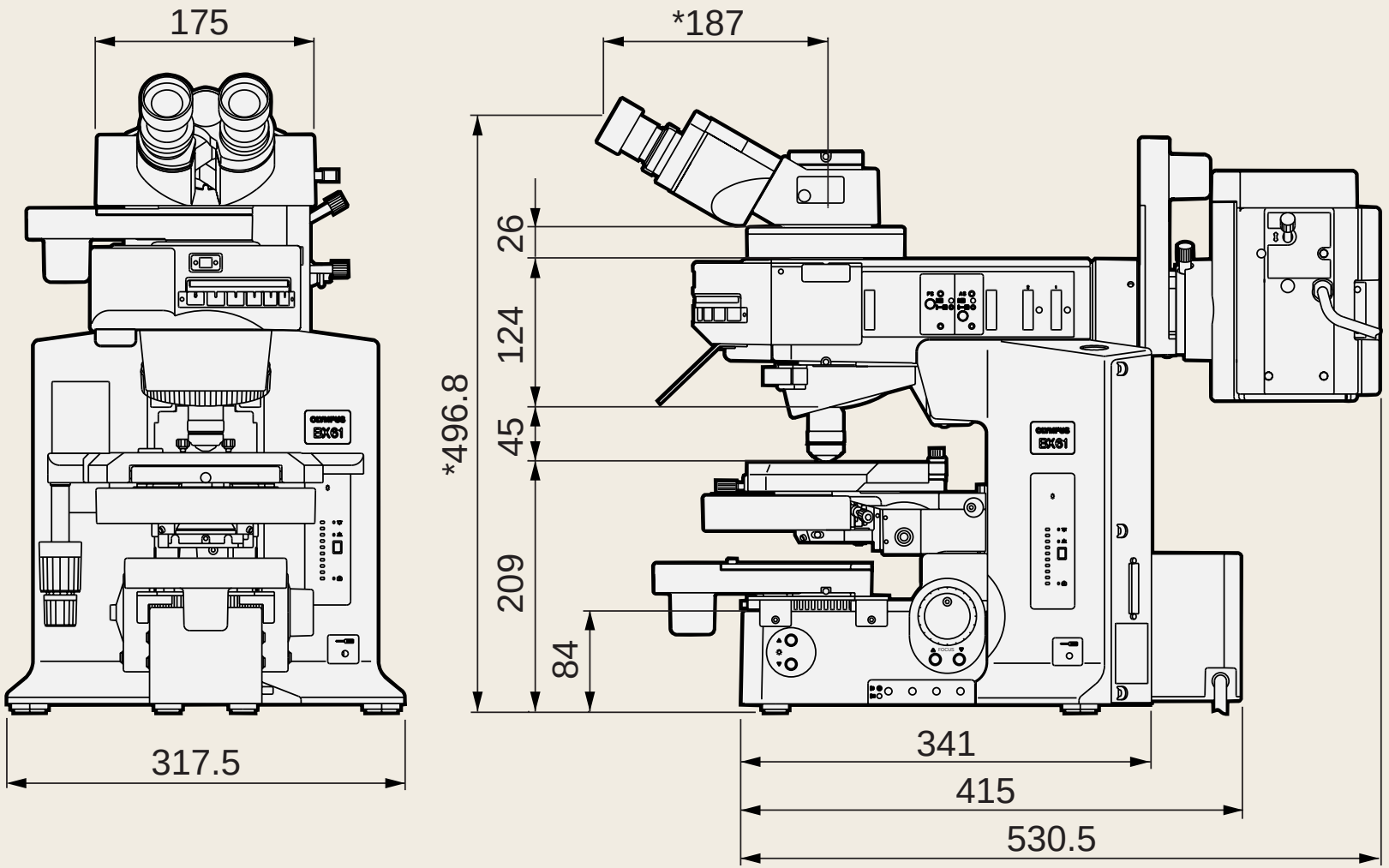

The length marked with an asterisk (*) may vary according to interpupillary distance. Distance for figure shown is 62mm.